Reg. No.: 22BAI1266

Name : AFZAL

VIT

Vellore Institute of Technology

Continuous Assessment Test - I1 (CAT 2) – May 2023

Programme	:	B. Tech CSE & Splns	Semester	:	Winter 22-23
Course	:	Digital Systems Design	Code	:	BECE102L
			Slot	:	B1+TB1
Faculty	:	Dr. Ashok Mondal Dr. Deepa T Prof. Deepa M Dr. Meera P S. Dr. Sriramalakshmi P Dr. Subbulekshmi D	Class Nbr	:	CH2022232300193 CH2022232300530 CH2022232300191 CH2022232300559 CH2022232300535 CH2022232300526
Time	:	1.5 hours	Max. Marks	:	50

Answer ALL Questions

Q.No.	Question Description	Marks
1.	Compute the output of a 5 bit booth multiplier taking **A = 11** as the multiplicand and **B = - 13** as the multiplier.	10
2.	a) In computer computations it is often necessary to compare numbers. Two four-bit signed numbers, $X = x_3x_2x_1x_0$ and $Y = y_3y_2y_1y_0$, can be compared using the subtractor circuit shown in Figure, which performs the operation X − Y . The three outputs denote the following: • Z = 1 if the result is 0; otherwise Z = 0 • N = 1 if the result is negative; otherwise N = 0 • V = 1 if arithmetic overflow occurs; otherwise V = 0 Show how Z, N, and V can be used to determine the cases X = Y , X <Y, X ≤ Y , X > Y, and X ≥ Y with the help of an example . (5 marks) 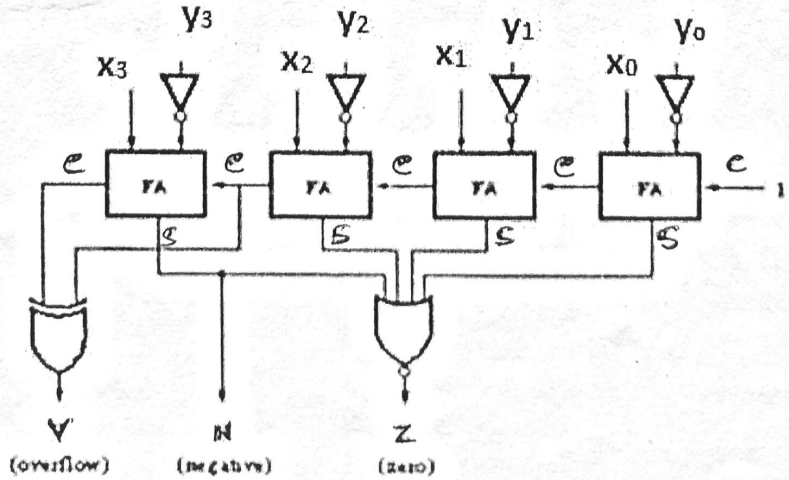 	10

b) Draw the logic diagram of a 4 bit cascaded full adder/subtractor. Perform the addition of two unsigned numbers 11 and 14 using the above circuit and mark the inputs and outputs correctly in the diagram. (5 marks)

3. Design a synchronous modulo 8 up/down counter using D flip flops . **10**

4. A carry look ahead (CLA) adder is designed to add two 4-bit numbers. The circuit of CLA adder is made up of full adders, half adders and logical AND gates. The input bits for CLA adder are $A_3A_2A_1A_0$ and $B_3B_2B_1B_0$ respectively. **10**

   a) Draw the circuit diagram of the 4-bit carry look ahead adder.

   b) Determine the number of full adders, half adders and logical AND gates.

   c) Find the expressions of 3rd and 4th stage output signals.

5. a) What is the function table for the feedback circuit shown in Figure ? Can it work as a flip-flop or not? Give reasons. (5 marks)

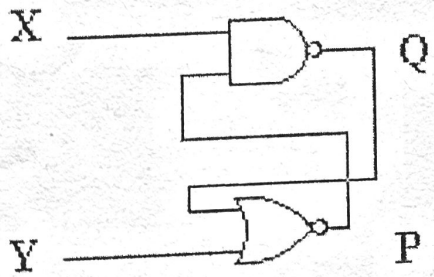

10

b) The shift register shown in Figure is initially loaded with 1010. If clock is applied continuously, after how many clock pulses the content of the shift register becomes 1010 again ? (5 marks)

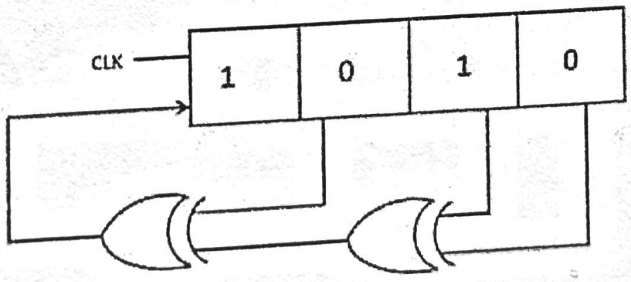

⇔⇔⇔